Rev A	MDR-J6

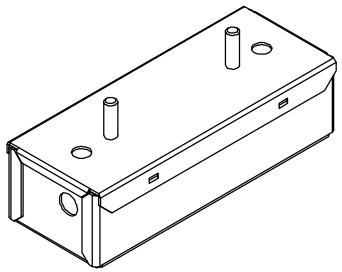

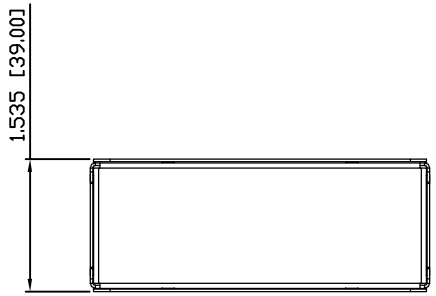

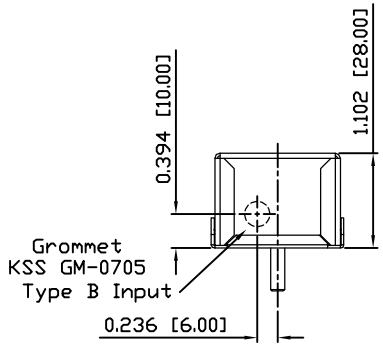

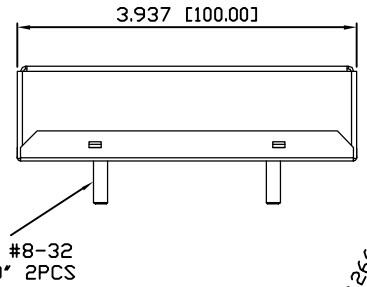

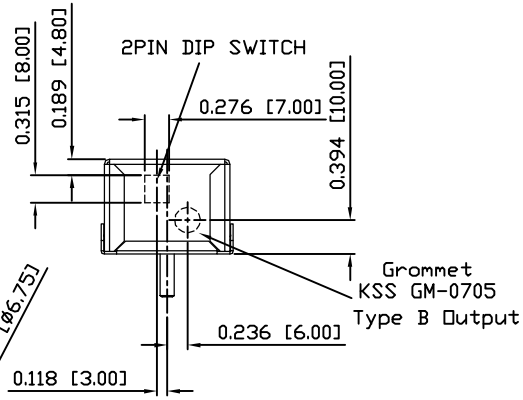

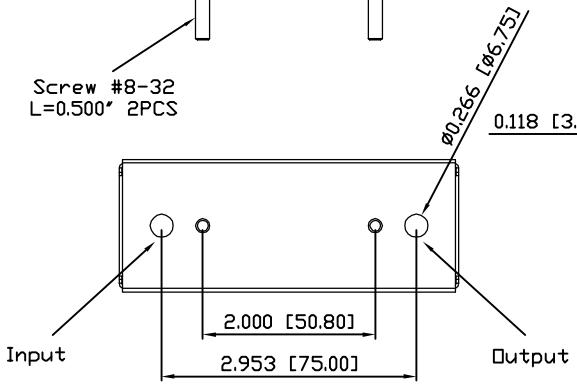

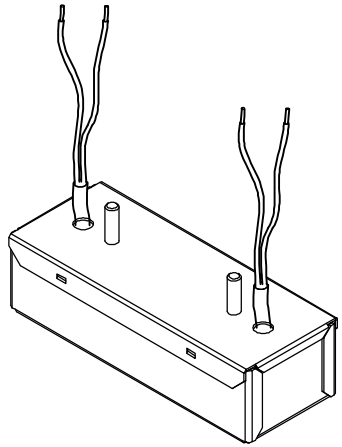

Typr A (Standard)

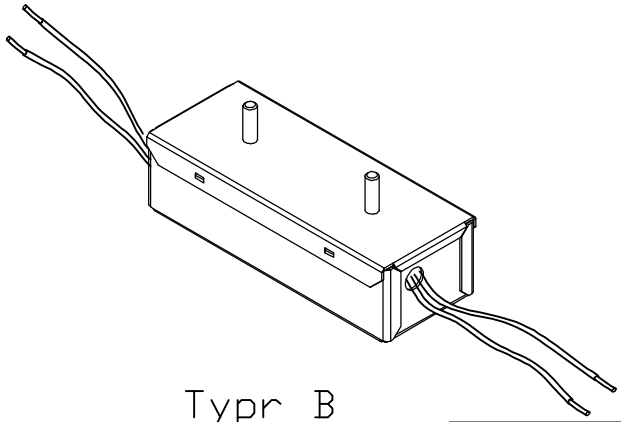

Typr B

圖面尺寸單位為英制in[公制mm]

量產使用修正圖面
請將原有圖樣作廢
10/12/2016

SYM.	LOC.	REVISION DESCRIPTION	DATE
1		Released for Production	Su 10/12/2016

TOLERANCE UNLESS OTHERWISE SPEC.

MILLIMETER			INCH		
0.0	=	±0.35	.0	=	±0.020
0.00	=	±0.15	.00	=	±0.010
			.000	=	±0.005

FRACTIONS AS-CASTING ±0.8 ±1/32

ALL EDGES BROKEN .005~.010 0.13~0.25 ANGLES ±

DRAWING NAME	Macron LED Driver J6 Case		
MATERIAL	T=0.8mm CRS	DRAWING BY	Su 10/12/2016
FINISH	White	CHECKED BY	
SCALE		APPROVED BY	

MACRON ASSOCIATE COMPANY
www.macrongroup.com
TAIWAN R. O. C.

DRAWING NUMBER: Rev A MDR-J6

4-A20-002-06_A0